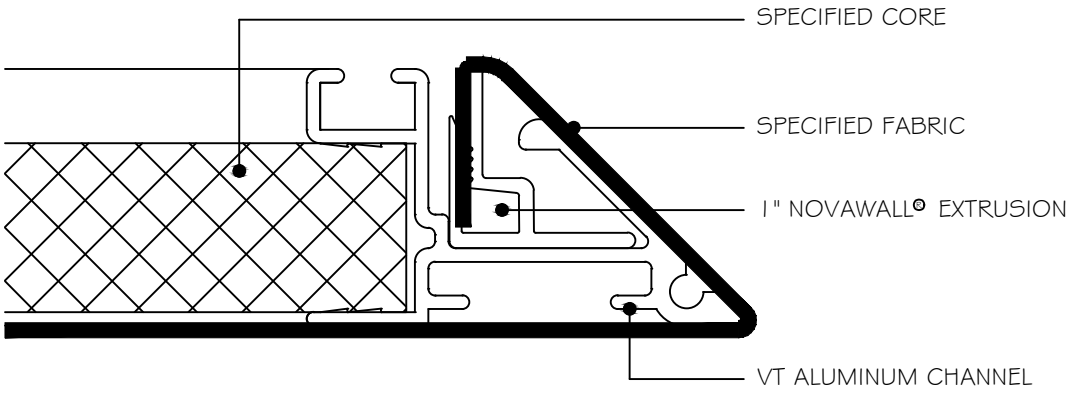

VT ALUMINUM CHANNEL/ BEVEL EDGE

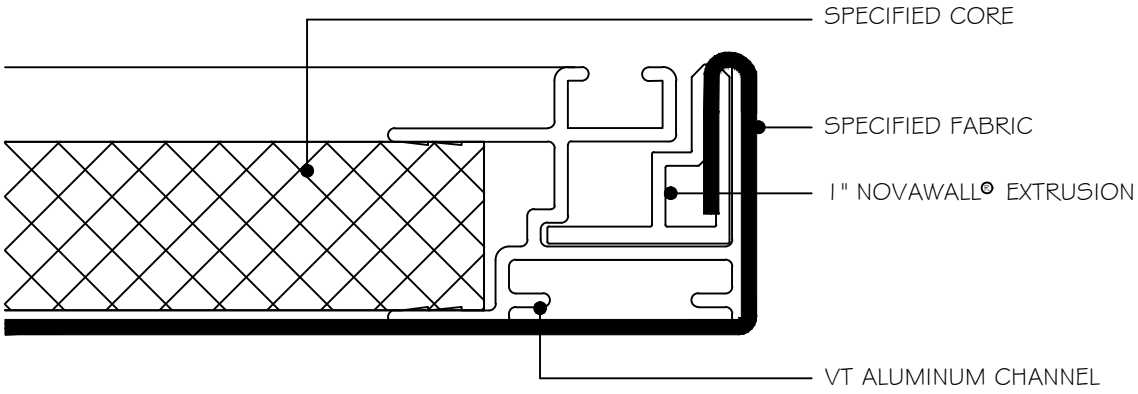

VT ALUMINUM CHANNEL/ SQUARE EDGE

NOTE: DETAILS ARE AVAILABLE AT www.novawall.com
FOR DOWNLOAD IN AutoCAD© FORMAT.

NOVAWALL VT ALUMINUM CHANNEL DETAILS

SCALE: 1" = 1"

NOVAWALL SYSTEMS, INC.
881 SOUTH PICKETT STREET
ALEXANDRIA, VIRGINIA 22304
(P) 800.695.6682

© 2000 - 2018, Novawall Systems, Inc. ALL RIGHTS RESERVED